PRODUCT TECHNICAL DATA SHEET

CARTRIDGE DRG32-PCR50

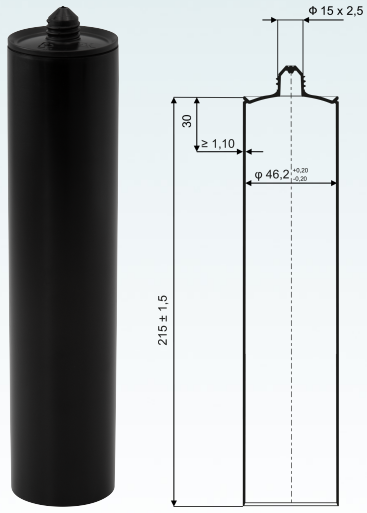

Volume	310 ml
Material	PCR HDPE 50%, HDPE 50%
Weight	41 ± 1,5 g
Inner diameter	Ø46,2 ± 0,2 mm
Thread	15 x 2,5 mm
Colors	gray, black *
Warranty	12 months

Material composition:

High Density Polyethylene	≥96.5% (including up to 50% PCR)
Masterbatch, additives, paints	≤3.5%

Decoration possibility
- screen printing (max 6 colours)

Palletisation **
3360 / 3780 szt. - 140pcs. per box
3840 szt. - 64pcs. per strip

Other aspects:
- packaging requires storage testing in the target use environment
- the customer is responsible for validating the packaging with the target batch

Compatibile products
Plunger K-02, Plunger K-11
Nozzle Clip DC10, Nozzle Standard D01, Nozzle V-SEAM with clip, Nozzle Clip Cap VD17, Nozzle DC10-PCR50B, Nozzle VD17-PCR50B

* Other colours available on special order
** other variants to be discussed with Customer Office

V.5 / 01/07/2026